Instructions for use

WPC privacy fence CALLADO PREMIUM

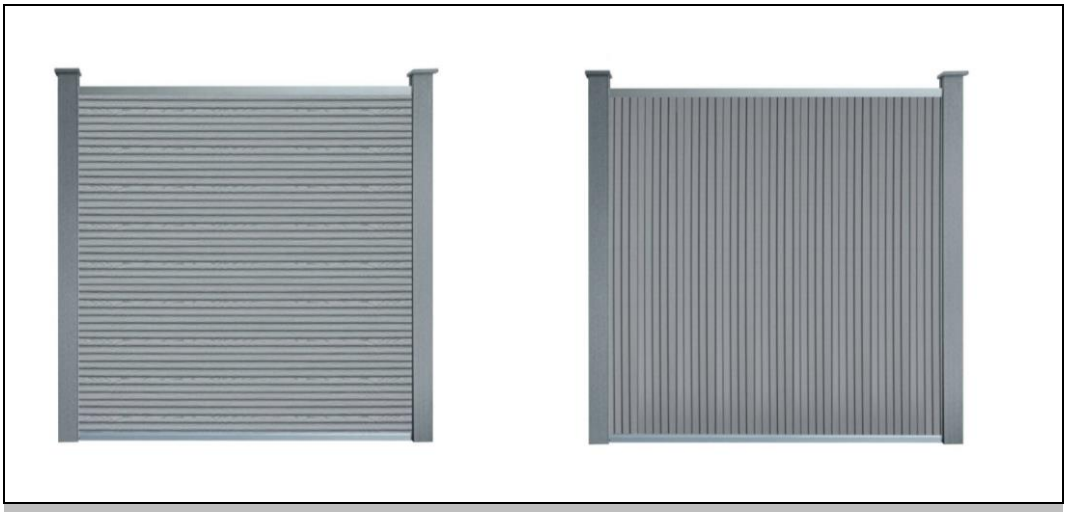

Original instructions for use

Designed in Germany

IMPORTANT:
KEEP FOR FUTURE REFERENCE.
READ CAREFULLY!

Table of contents

1. General information ... 3
1.1. Product overview ... 3
1.2. General notes ... 3
1.3. Guarantee ... 4
2. Information on the instructions for use ... 4
2.1. Availability of the instructions for use ... 4
2.2. Information on the translation ... 4
2.3. Target groups of the instructions for use ... 4
2.4. Explanation of symbols ... 5
2.5. General information on the instructions for use ... 5
2.6. Intended use ... 5
2.7. General safety instructions ... 5
3. Product features ... 7
3.1. Technical data ... 7
4. Scope of delivery and assembly ... 8
4.1. Safety instructions ... 12
4.2. Structure of the product ... 12
5. Application ... 25
5.1. Safety instructions ... 25
5.2. Initial commissioning ... 25
5.3. Operation ... 25
6. Troubleshooting ... 25
7. Maintenance and care ... 26
7.1. Safety instructions ... 26
8. Dismantling ... 26
8.1. Safety instructions ... 26
9. Waste disposal ... 26
9.1. General information ... 26

Dear customer,

Thank you for choosing a product from **Home Deluxe GmbH**. We hope you enjoy your new WPC privacy fence CALLADO PREMIUM.

The instructions for use support you in the installation, commissioning, operation and maintenance of the product. The instructions for use and the safety instructions must be read carefully and in full. Observe these instructions to avoid hazards.

1. General information

1.1. Product overview

Model: WPC privacy fence CALLADO PREMIUM
Item ID: 27588 | Variant ID: 71808

WPC privacy fence CALLADO PREMIUM 180 x 185 cm - 1x element + 2 posts
Article ID: 27588| Variant ID: 71839
WPC privacy fence CALLADO PREMIUM 180 x 185 cm - 2x panel + 3 posts
Item ID: 27588 | Variant ID: 71841
WPC privacy fence CALLADO PREMIUM 180 x 185 cm - 3x element + 4 posts
Item ID: 27588 | Variant ID: 71843
WPC privacy fence CALLADO PREMIUM 180 x 185 cm - 4x element + 5 posts
Item ID: 27588 | Variant ID: 71845
WPC privacy fence CALLADO PREMIUM 180 x 185 cm - 5x panel + 6 posts
Item ID: 27588 | Variant ID: 71847

1.2. General notes

In order to fulfil our claim, we are constantly improving quality, simplifying installation and operation and adapting the products to customer requirements. Due to these changes, the current version of the instructions for use can be found on our homepage.

The term "product" is used in the instructions for use for the WPC privacy fence "CALLADO PREMIUM".

1.3. Guarantee

The statutory liability for defects and warranty rights apply from the date of purchase.
Home Deluxe GmbH accepts no liability for damage caused by non-compliance with the instructions for use. Complaints arising from improper installation or use are excluded from the warranty. In the event of defects in the product, please contact our customer service in writing using the contact form on our home-page, stating the product name, serial number and a photo of the type plate:

Home Deluxe GmbH
Schanzeweg 2
32312 Lübbecke
Germany
Tel: +49 (0)5743 6181-0
www.home-deluxe-gmbh.de

If you have any further questions, please contact our customer service team using the contact form.

2. Information on the instructions for use

2.1. Availability of the instructions for use

The instructions for use are part of the product and should be kept complete and in the immediate vicinity of the product.

2.2. Information on the translation

The original instructions for use were written in German. Any other language available is a translation of the German version.

2.3. Target groups of the instructions for use

The instructions for use must be read and observed by every person involved in one of the following activities or uses:

- Unpacking
- Assembly / Installation
- Commissioning / Operation
- Maintenance / inspection / care
- Troubleshooting / repair
- Waste disposal

2.4. Explanation of symbols

Symbol	Explanation of symbols
	**WARNING** The symbol indicates possible dangers that could result in fatal or serious injuries. Before carrying out the corresponding installation or application step, read the corresponding note.
	**INFO** The symbol provides important information and indicates material damage. Observe these before carrying out the corresponding installation or application step in order to understand problems and avoid damage.
	**Read instructions for use** The symbol indicates that the operating instructions must be read carefully before mounting/installing and/or operating the appliance.

2.5. General information on the instructions for use

The instructions for use refer to the WPC privacy fence CALLADO PREMIUM. It contains important information on installation, operation, maintenance and cleaning. The instructions for use, in particular the safety instructions, must be read carefully before using the product; keep the instructions for use in a safe place. Only use the product as described in these instructions for use to prevent accidental injury or damage. If you pass the WPC privacy fence CALLADO PREMIUM on to third parties, these instructions for use must also be handed over.

2.6. Intended use

The product is of high quality, durable and intended or suitable exclusively for use in private households to a reasonable and customary extent. Furthermore, our product is **not** intended for commercial use. Commercial use is only permitted with the written authorisation of Home Deluxe GmbH.

Only use the product as described in these instructions for use. Any other use is considered improper and may result in damage to property or personal injury. The manufacturer accepts no liability for damage caused by improper or incorrect use.

2.7. General safety instructions

General hazard warnings



- Improper handling can lead to considerable personal injury and damage to property. For this reason, assembly, installation, commissioning, troubleshooting, maintenance and repair work may only be carried out by qualified persons.
- The product can be used by children aged from 8 years and above and persons with reduced physical, sensory or mental capabilities or lack of experience and knowledge if they have been given supervision or instruction concerning use of the appliance in a safe way and understand the hazards involved.
- **Only** install the product if the scope of delivery is complete and in perfect condition.
- Ensure that all parts are undamaged and correctly installed. There is a risk of injury if they are not installed correctly. Damaged parts can affect safety and function.
- Only place the product on a safe, level and firm surface.
- Do not make any changes to the product.
- Check the fastening at regular intervals.

Danger for children



- Keep children away from packaging materials. There is a risk of suffocation!
- Keep children away from the product.
- Keep children away from the assembly site while the product is being assembled. The scope of delivery contains small parts that can be swallowed or cause serious injury.
- The product is not a children's toy, climbing wall or sports equipment.
- Children can injure themselves when playing with the product or when pulling up on the product
- Explain to the children how to use the product correctly and never leave them unsupervised while playing.
- Remove all sharp objects, broken glass or stones from the vicinity of the product. Ensure that children at play are not at risk.
- Make sure that small children do not put small parts in their mouths.

Risk of injury
Improper handling of the product can lead to injuries



- Check the product for visible damage before each use.
- Do not make any design changes to the product. Any modifications must be authorised in writing by the manufacturer and carried out in accordance with the instructions.
- If the product is damaged, it must no longer be used. Damaged parts must be repaired or replaced with original spare parts.
- Ensure that the product is permanently installed securely to avoid injury.

Risk of damage



- Improper handling of the product can lead to damage.
- Do not open the packaging with sharp objects (e.g. knives, scissors or similar) as this may damage the product. Be careful when opening.
- If you open the packaging carelessly with a knife or other sharp objects, the product may be damaged. Be very careful when opening the packaging.
- Do not climb onto the product as there is a risk of falling and tipping over.

3. Product features

3.1. Technical data

WPC privacy fence CALLADO PREMIUM 1x element + 2x posts 180 x 185 cm	
Dimensions (L x H)	170 x 180 cm
Post dimensions (L x W x H)	7 x 7 x 185 cm
Overall dimensions 1x element + 2x posts	180 x 185 cm
Material panels	WPC

WPC privacy fence CALLADO PREMIUM 2x panel + 3x posts 180 x 185 cm	
Dimensions (L x H)	170 x 180 cm
Post dimensions (L x W x H)	7 x 7 x 185 cm
Overall dimensions 2x elements + 3x posts	355 x 185 cm
Material panels	WPC

WPC privacy fence CALLADO PREMIUM 3x panel + 4x posts 180 x 185 cm	
Dimensions (L x H)	170 x 180 cm
Post dimensions (L x W x H)	7 x 7 x 185 cm
Overall dimensions 3x elements + 4x posts	530 x 185 cm
Material panels	WPC

WPC privacy fence CALLADO PREMIUM 4x panel + 5x posts 180 x 185 cm	
Dimensions (L x H)	170 x 180 cm
Post dimensions (L x W x H)	7 x 7 x 185 cm
Overall dimensions 4x elements + 5x posts	705 x 185 cm
Material panels	WPC

WPC privacy fence CALLADO PREMIUM 5x panel + 6x posts 180 x 185 cm	
Dimensions (L x H)	170 x 180 cm
Post dimensions (L x W x H)	7 x 7 x 185 cm
Total dimensions 5x elements + 6x posts	880 x 185 cm

Material panels	WPC

4. Scope of delivery and assembly

Check the packaging for external damage on delivery. Furthermore, immediately after unpacking, check that the scope of delivery is complete and that the product and all components are in perfect condition. Only assemble the product if the scope of delivery is complete and undamaged.

Components/parts (185 cm) 1x element horizontal / vertical

No.	Description of the	Quan-tity	Pictures
1	Post	2	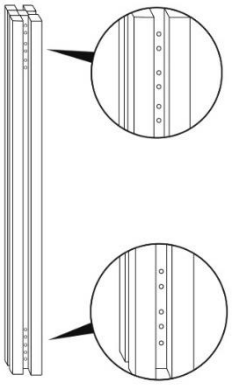
2	Cover set	2	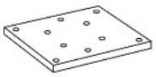
3	Cover set	2	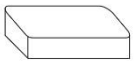
4	Panel	8	
5	Panel	1	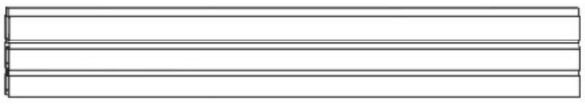
6	Aluminium strip at the bottom	1	
7	Aluminium strip at the top	1	
A	Screw	8	
B	Screw	8	

Components/parts (185 cm) 2x elements horizontal / vertical

No.	Description of the	Quan-tity	Pictures
1	Post	3	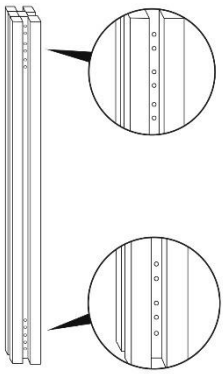
2	Cover set	3	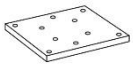
3	Cover set	3	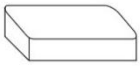
4	Panel	16	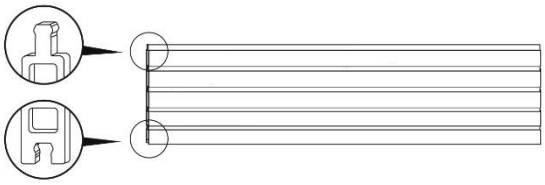
5	Panel	2	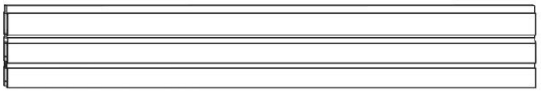
6	Aluminium strip at the bottom	2	
7	Aluminium strip at the top	2	
A	Screw	12	
B	Screw	16	

The satisfaction of our customers is our greatest concern!

We therefore want to make sure that you are completely satisfied with our products and services. If you have any cause for complaint, please use the following form to let us know and send it by e-mail to b2b@homedeluxe.de. Your request will be processed quickly and easily and will also help us to continuously improve our quality.

Complaint form

Please fill in the following fields:

1. Your name:
2. Order number:
3. Description of the complaint (please describe in detail)

4. Do you have pictures to support your complaint**? (**Please attach the pictures**)**

[ ] Yes
[ ] No

Please **tick** which spare part it is and **tell** us the number of damaged spare parts (see red arrows).

180 x 185 cm - 1/2x elements

		
X	X	X
Anzahl	Anzahl	Anzahl
		
X	X	X
Anzahl	Anzahl	Anzahl
		
X	X	X
Anzahl	Anzahl	Anzahl

Thank you very much for your feedback!
We will take care of your request as soon as possible and give you feedback.

4.1. Safety instructions

All health and safety information must be read.

Risk of injury
Improper handling during installation can lead to injuries



- Your product will be delivered in several parcels. Please make sure that the parcels are opened at the top. Be very careful when opening the parcels as there are fragile parts in the parcels.
- Immediately after unpacking, check that the scope of delivery is complete and that the product and all parts are in perfect condition.
- **Only** install the product if the scope of delivery is complete and in perfect condition.
- Only place the product on a safe, level and firm surface.
- Always observe the mounting dimensions and use the mounting material supplied.
- Operating errors, assembly errors or damage caused by assembly are excluded from the warranty.
- At least 2 people are required to assemble the product.
- Wear protective clothing such as safety shoes and protective gloves during assembly.
- **We would like to point out that Home Deluxe GmbH does not assume any costs for installation or manual services - such as electrician costs or comparable specialist costs.**

4.2. Structure of the product

The product is delivered disassembled and can be assembled with little effort. Follow the assembly instructions carefully. If the instructions are not followed, the function and safety of the product cannot be guaranteed.

Tools required

	Screwdriver		Measuring tape
	Allen key		Cutter knife



- The following instructions must be read carefully.

Note: The distance between the foundation holes must be 174 cm (measured in the centre).

Structure of the product 185 x 180 cm - 1x element horizontal / vertical	
Illustration	**Description of the**
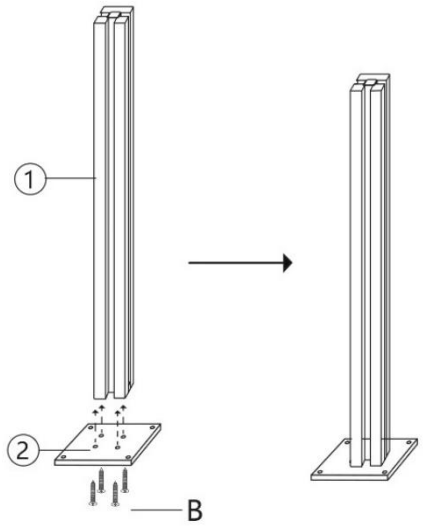	**Step 1:** Place the post (1) on the cover set (2) and screw them together with the screws (B). Distance between posts (measured from the centre of the post): 174 cm
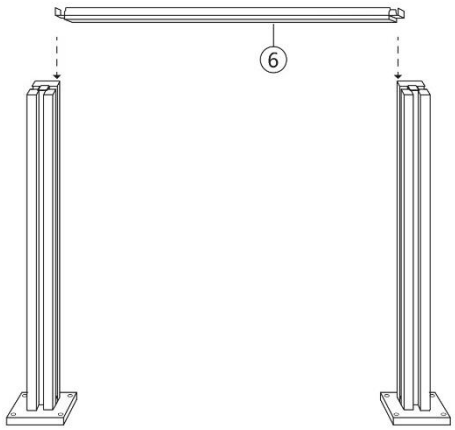	**Step 2:** Insert the aluminium strip at the bottom (6).
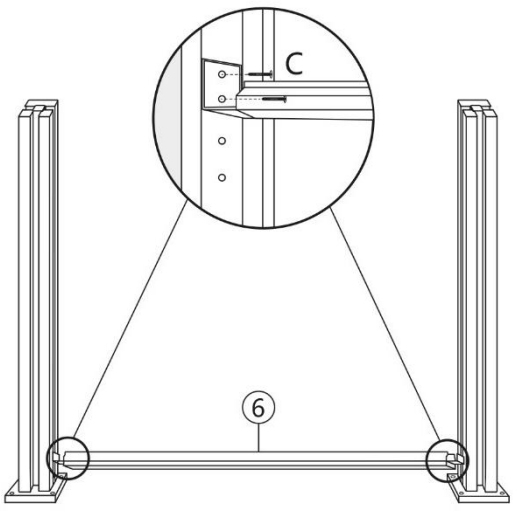	**Step 3:** Screw the aluminium strip at the bottom (6) to the post using the screws (C).

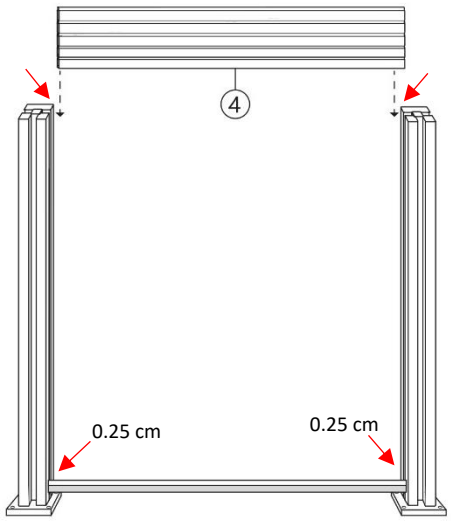

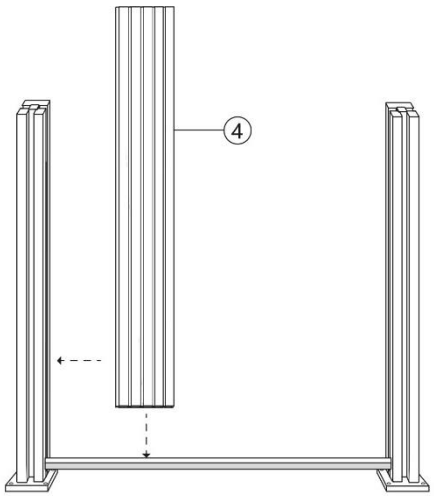

Step 4:

Insert the panels (4) one after the other.

You can decide for yourself whether you want to use the panels horizontally or vertically.

Note: Leave a gap of 0.25 cm on both sides when inserting the panels. (see marking)

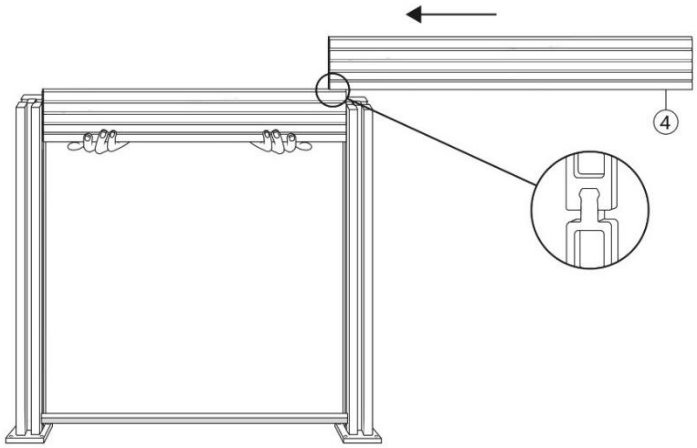

Step 5:

When inserting, make sure that the panels (4) sit flush in the groove.

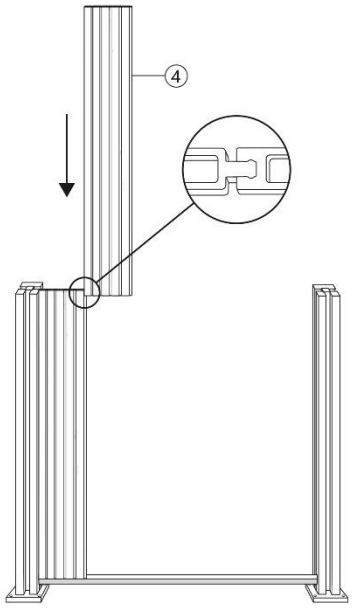

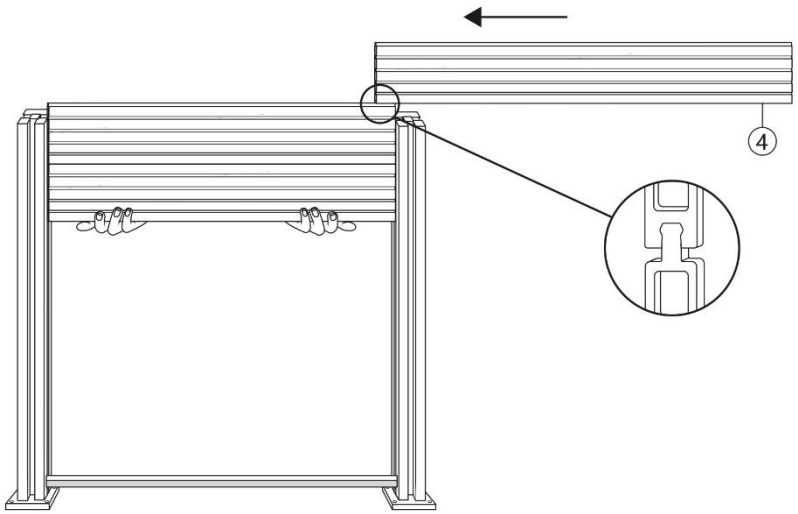

Step 6:

When inserting, make sure that the panels (4) sit flush in the groove.

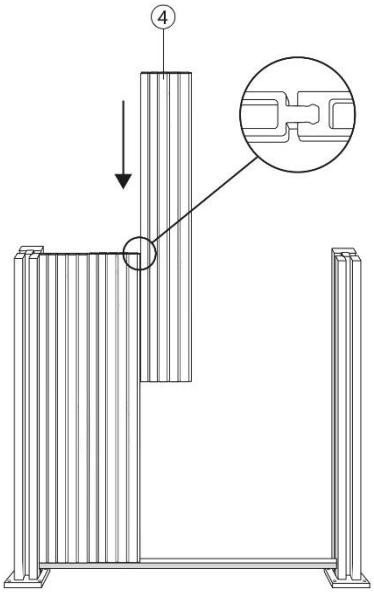

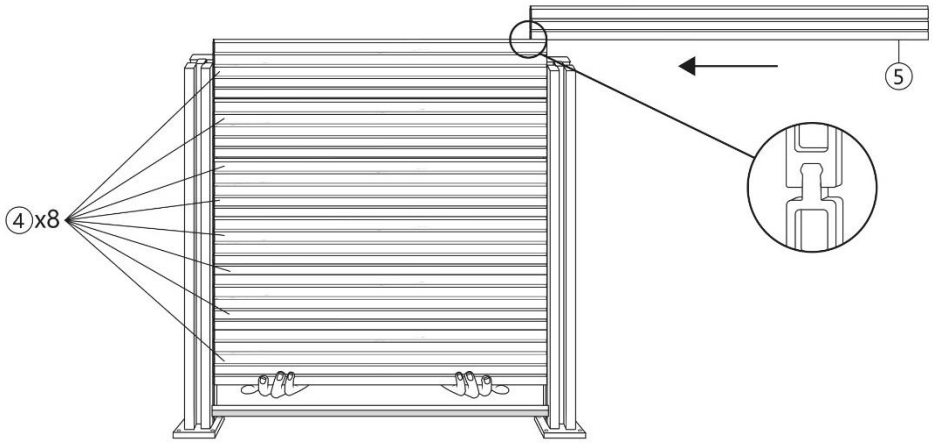

Step 7:

When inserting, make sure that the panels (4) sit flush in the groove.

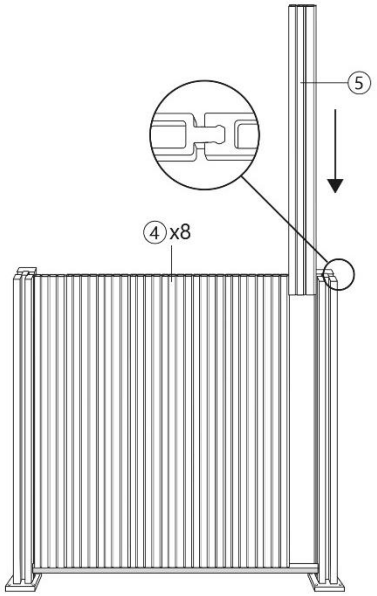

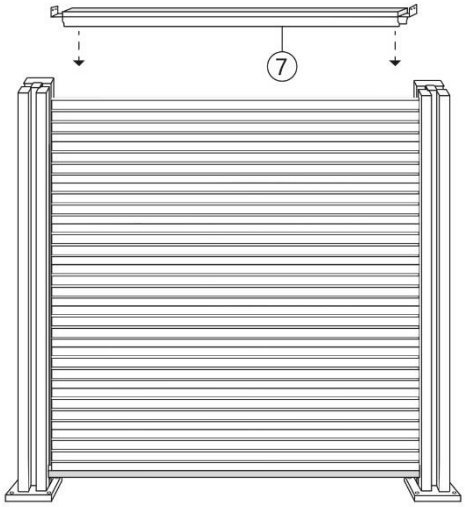

Step 8:

Cover the panels with the aluminium strips at the top (7).

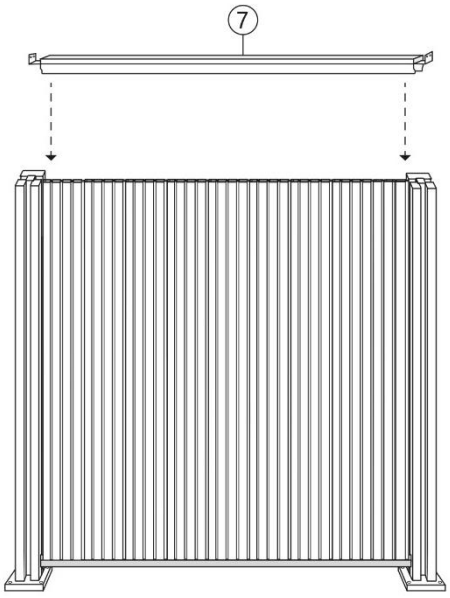

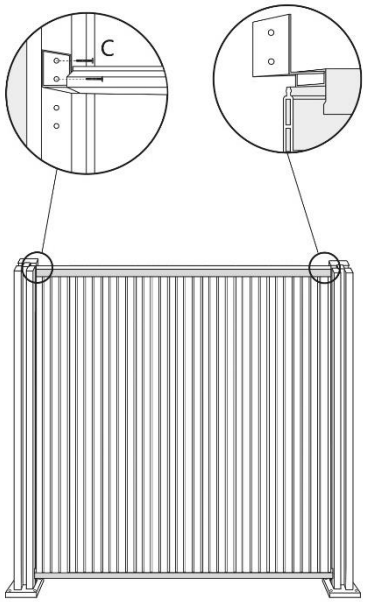

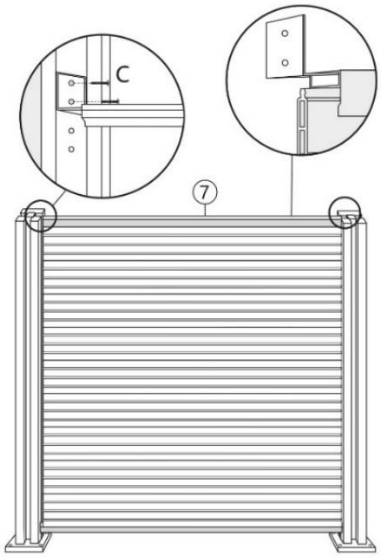

Step 9:

Screw the aluminium strip tight at the top with the screws (C).

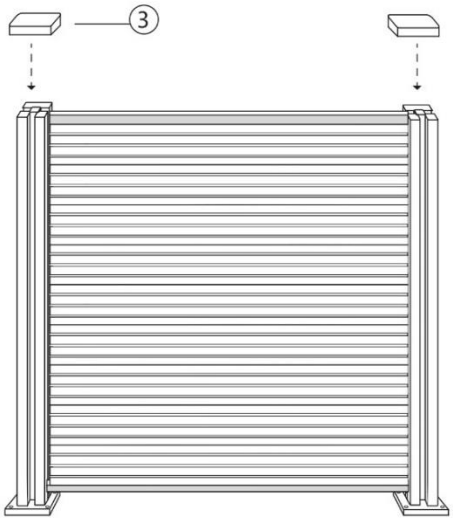

Step 10:

Insert the cover set (4)).

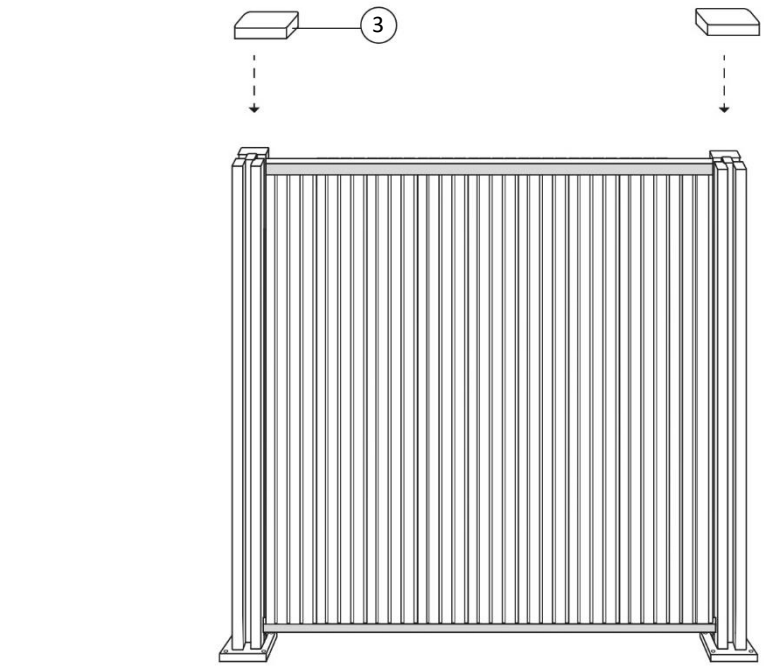	
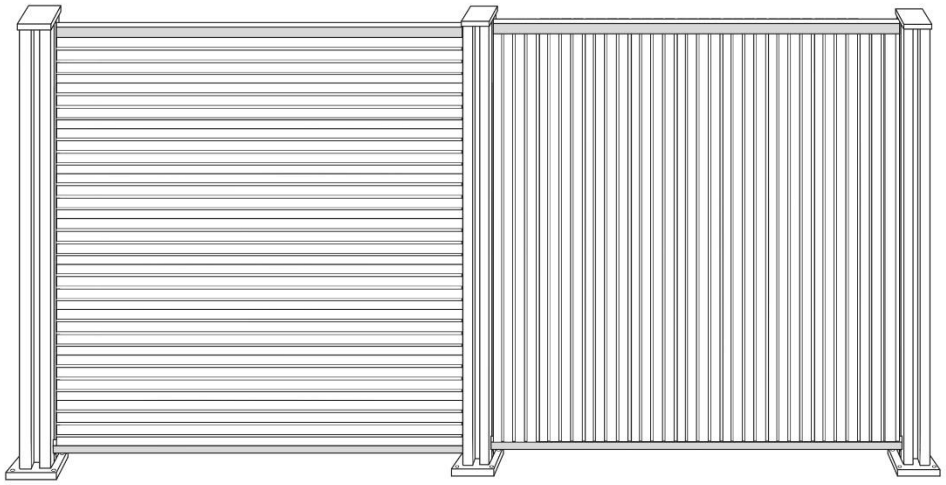	**Step 11:** Finished product

Structure of the product 185 x 180 cm - 2x elements horizontal / vertical	
Illustration	**Description of the**
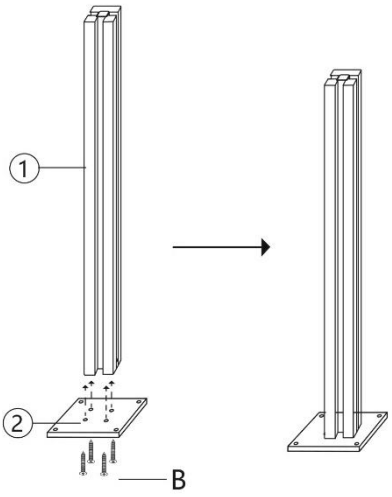	**Step 1:** Place the post (1) on the cover set (2) and screw them together with the screws (B).
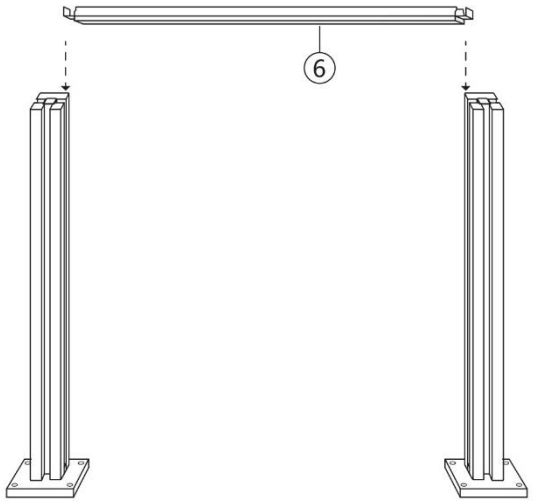	**Step 2:** Insert the aluminium strip at the bottom (6).
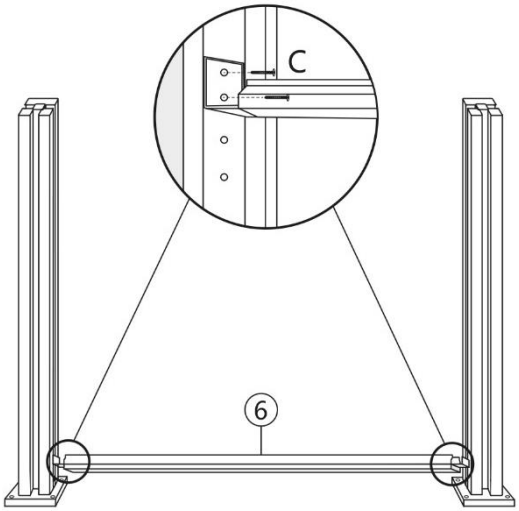	**Step 3:** Screw the aluminium strip at the bottom (6) to the post using the screws (C).

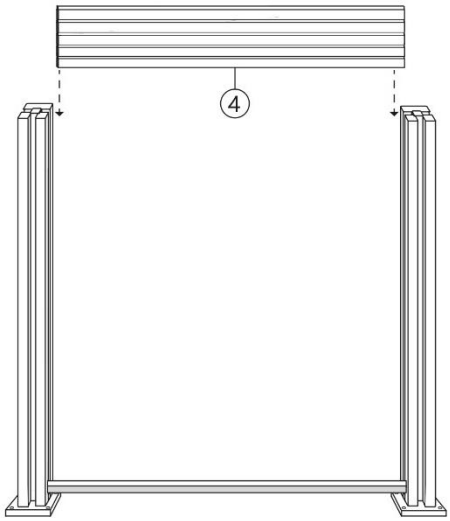

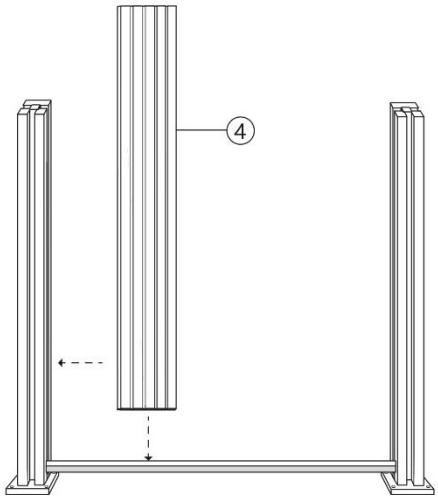

Step 4:

Insert the panels (4) one after the other.

You can decide for yourself whether you want to use the panels horizontally or vertically.

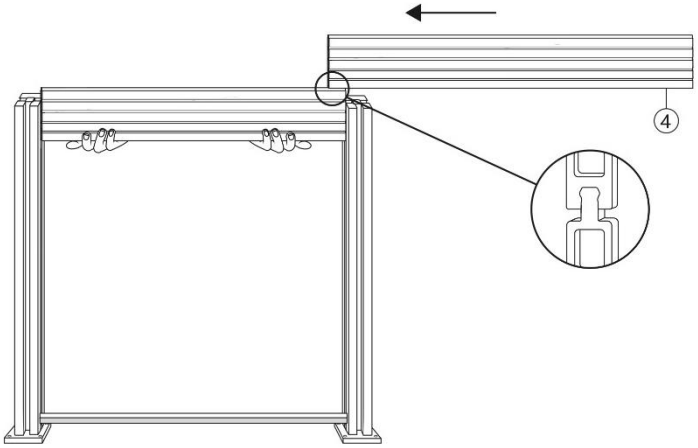

Step 5:

When inserting, make sure that the panels (4) sit flush in the groove.

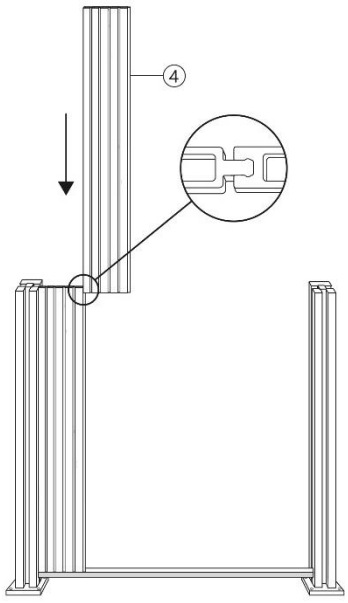

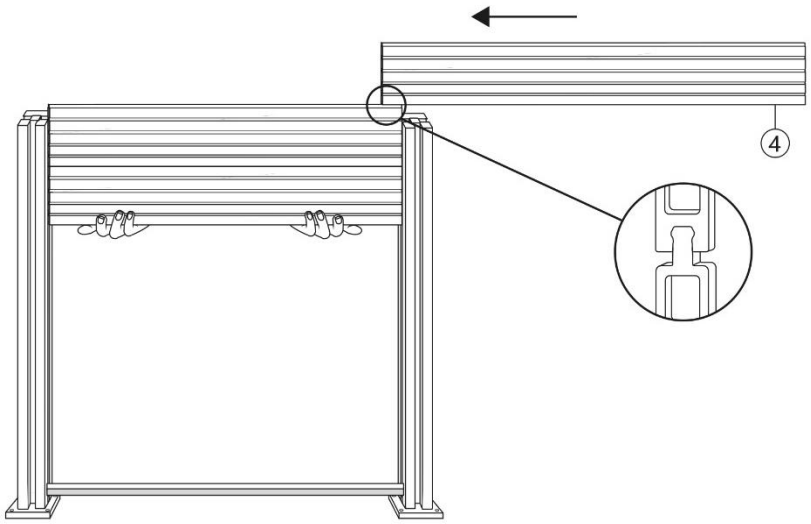

Step 6:

When inserting, make sure that the panels (4) sit flush in the groove.

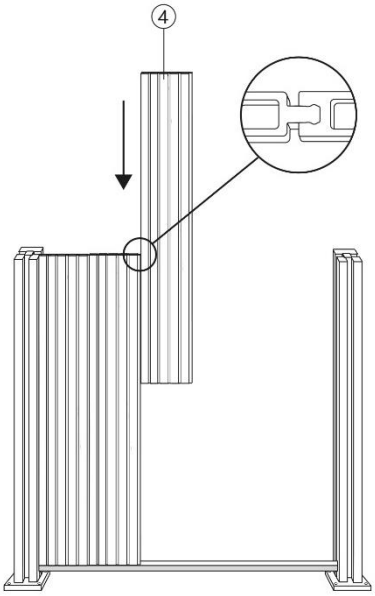

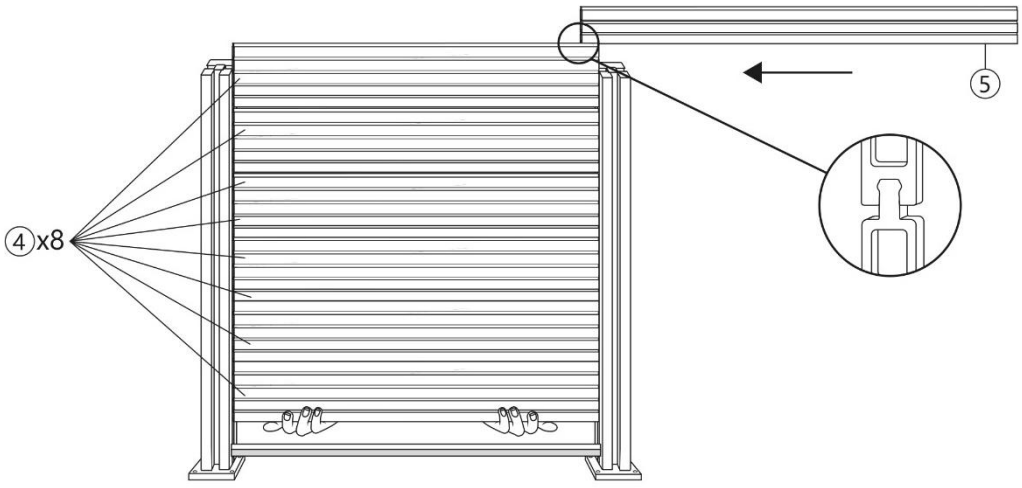

Step 7:

When inserting, make sure that the panels (4) sit flush in the groove.

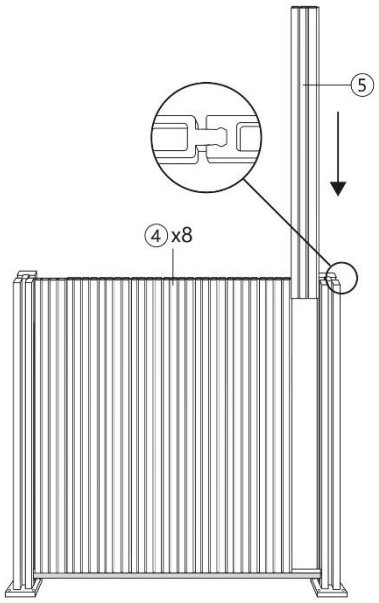

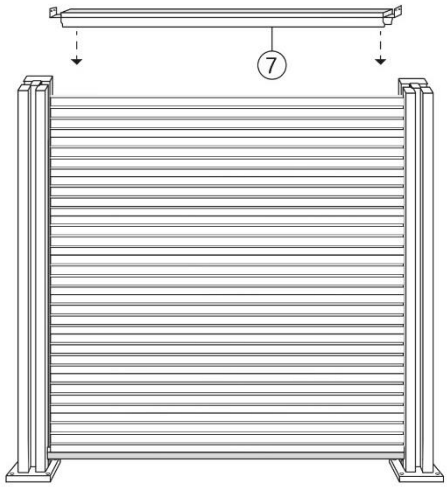

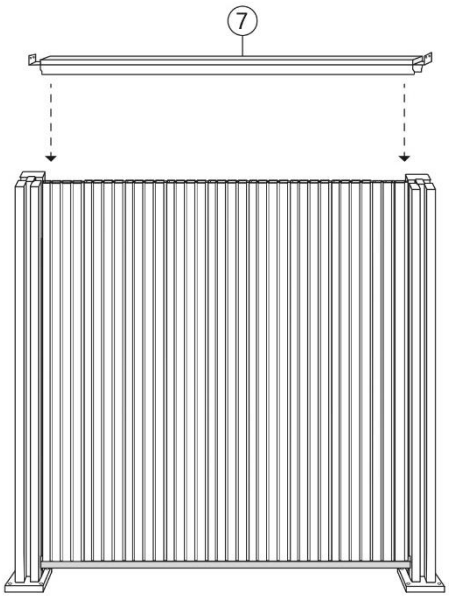

Step 8:

Cover the panels with the aluminium strips at the top (7).

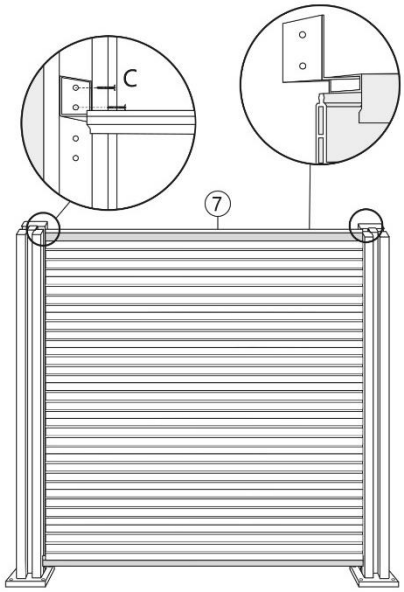

Step 9:

Screw the aluminium strip tight at the top with the screws (C).

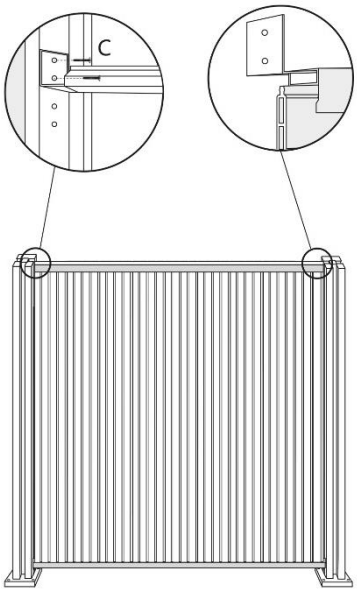

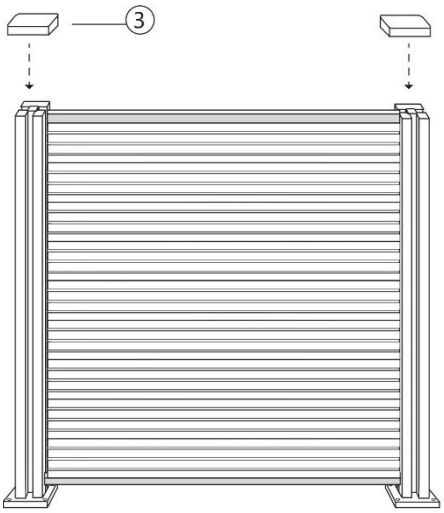

Step 10:

Insert the cover set (4).

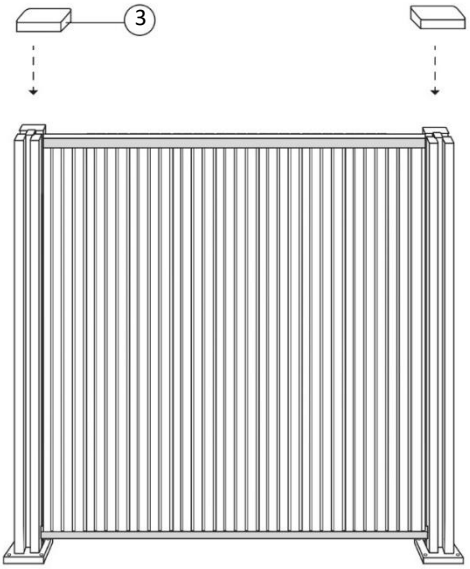

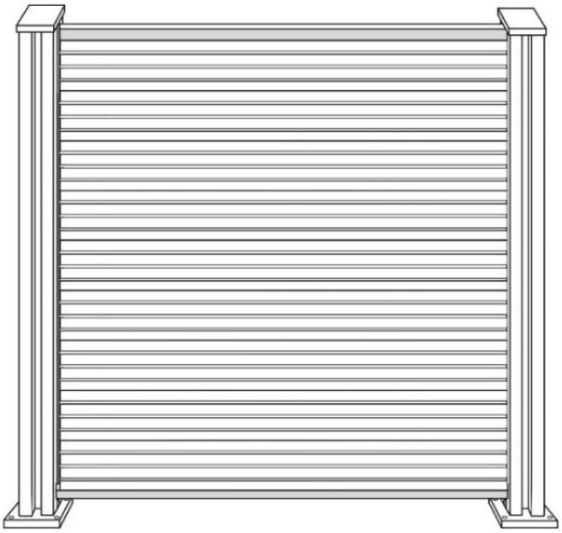

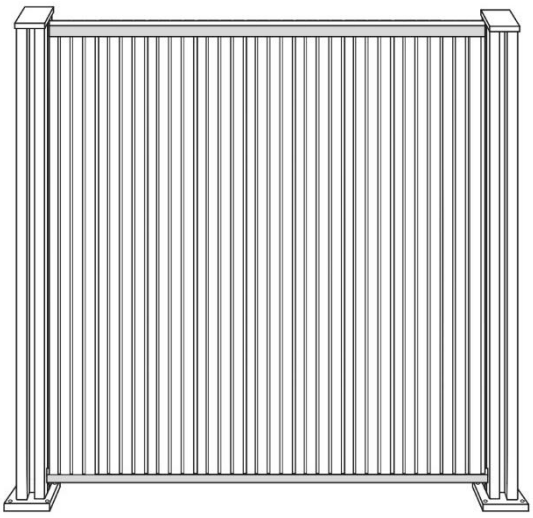

Step 11:

Finished product.

5. Application

5.1. Safety instructions

The following health and safety information must be read carefully.

Risk of injury
Improper handling during operation can lead to injuries



- Do not use a damaged product.
- Do not make any changes to the product.
- The product is not a children's toy, climbing wall or sports equipment. Children are not permitted to play with the product.
- Check the fastening at regular intervals.

5.2. Initial commissioning

Check the product for damage before using it for the first time. The product may only be used if it is undamaged.

5.3. Operation

Check before using the product,

- the proper condition.
- All fastenings

6. Troubleshooting

If the following faults occur during operation, please check the following fault causes using the following table. If the fault cannot be rectified by the measures listed, take the product out of operation.

Error	Possible cause	Solution
The product wobbles or vibrates	- The fastening screws have come loose - The product is overloaded - The product is not used correctly	- Tighten the fastening screws - Comply with load limits - Use the product correctly

If another problem occurs with the product, please contact us.

7. Maintenance and care

7.1. Safety instructions

Risk of injury
Improper handling during operation can lead to injuries



- Clean the surfaces with warm water and a soft brush or cloth.
- WPC cleaners can also be used as required.
- Do not use aggressive cleaning agents or high-pressure cleaners for cleaning.
- Also observe the instructions of the detergent manufacturer.

8. Dismantling

8.1. Safety instructions

Risk of injury
Improper handling during disassembly can lead to injuries



- At least 2 people are required for disassembly.
- Secure the product against falling before dismantling.
- Disassembly of the product must be carried out in reverse order to assembly. (**see chapter Assembly**)

9. Waste disposal

9.1. General information



- Dispose of the product and all components in accordance with local and country-specific regulations to prevent damage to the environment.
- Our packaging is made from environmentally friendly materials. They can be recycled and thus serve as valuable raw materials. Dispose of the packaging material (cardboard, dirty packaging, etc.) separately and professionally in accordance with the applicable national regulations.
- Contact the manufacturer if you are unsure about disposal.
- You can also obtain information on proper disposal from the local waste disposal centres.

Home Deluxe GmbH
Schanzeweg 2
32312 Lübbecke
Germany
Tel: +49 (0)5743 6181-0
www.home-deluxe-gmbh.de

GA-378-00-callado_premium_180x185
2025/01